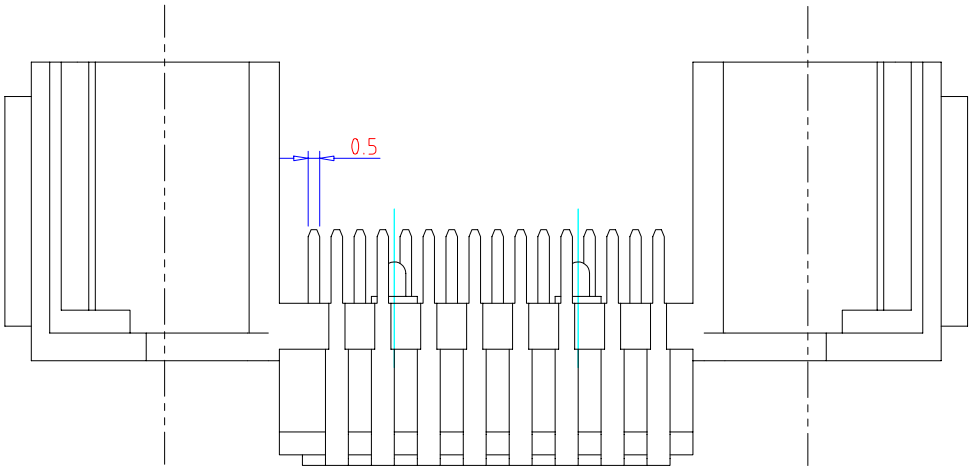
0.5

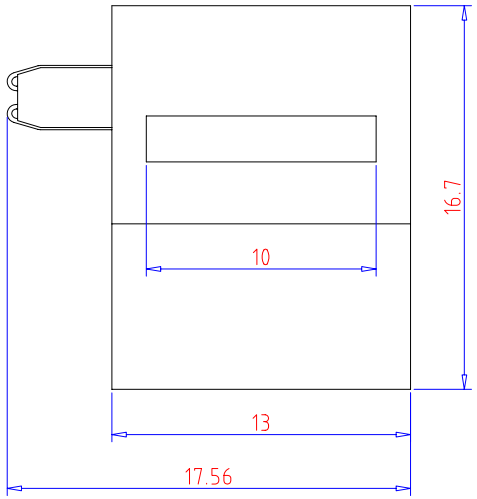
16.7
10
13
17.56

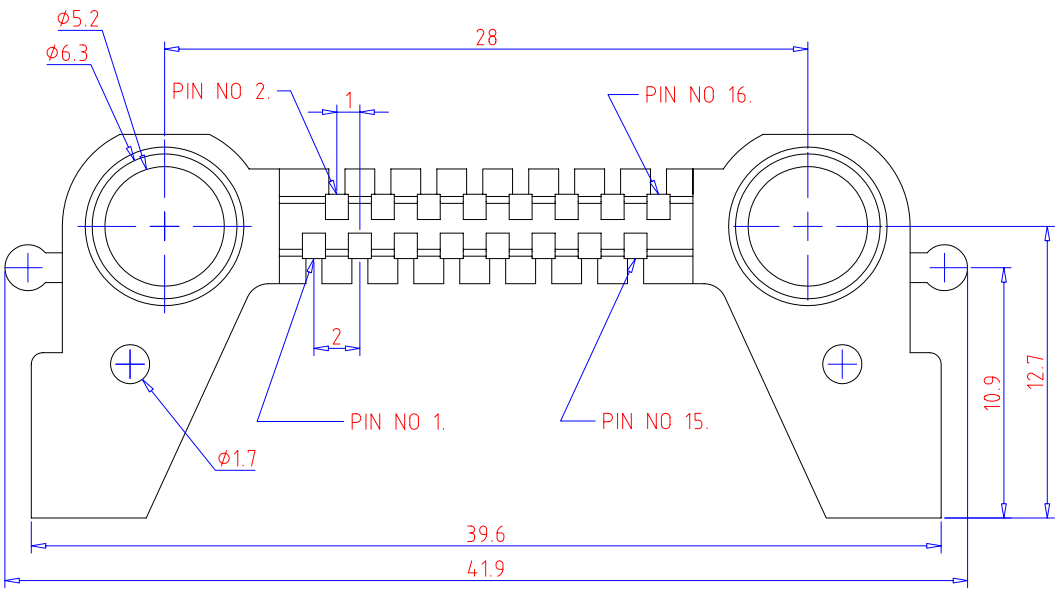
ϕ5.2
ϕ6.3
28
PIN NO 2.
1
PIN NO 16.
2
PIN NO 1.
PIN NO 15.
ϕ1.7
10.9
12.7
39.6
41.9

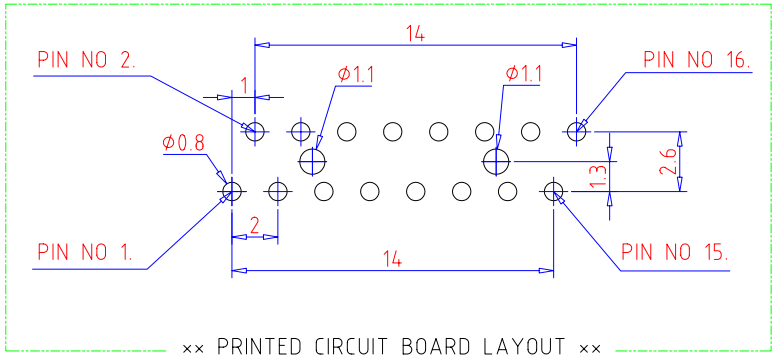
14
PIN NO 2.
1
ϕ1.1
ϕ1.1
PIN NO 16.
ϕ0.8
1.3
2.6
2
PIN NO 1.
14
PIN NO 15.
×× PRINTED CIRCUIT BOARD LAYOUT ××