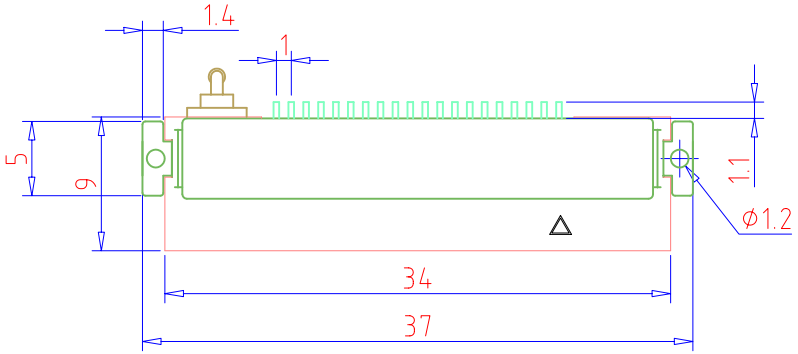

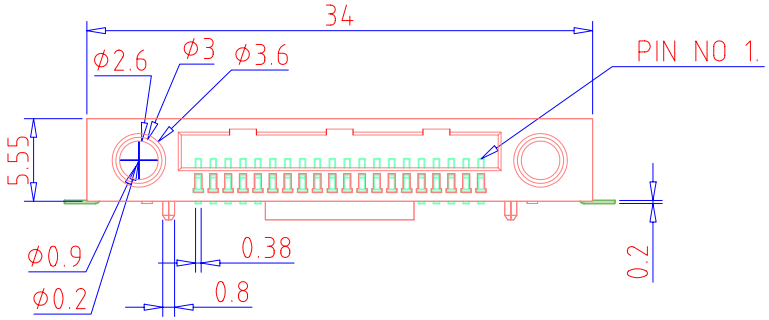

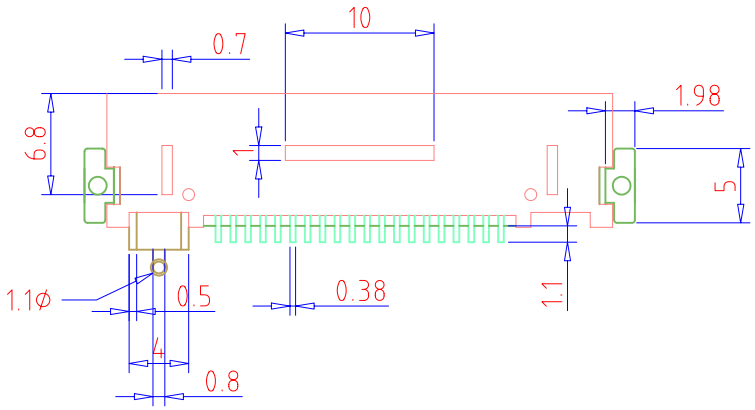

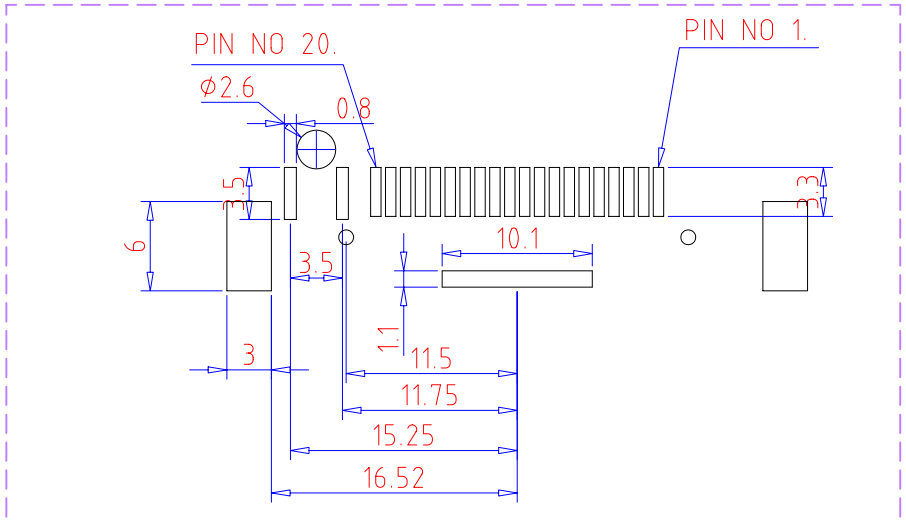

×× PRINTED CIRCUIT BOARD LAYOUT ××